The new fan generation S-Force

ebmpapst

S-Force
The Ultimate Performer

The strongest team in the league

The S-Force series is composed of five smaller series with sizes from 80 to 172 mm. Each is the world champion in its class in terms of air performance and pressure build-up - with first-class motor efficiency and a long service life. Wherever you need cooling performance fast that is equally quick and powerful, they are a solution for which there is virtually no alternative.

Compact and uncompromising

The S-Force series reaches nominal speeds up to 14,000 rpm and operating values that had previously been attained only by larger fans. Harnessing this much power in the smallest space requires outstanding strength values. To equip the housing, stator, bearing system and rotor for high performance, a one-of-a-kind housing design was developed, with mechanical precision down to the smallest detail.

Full output with multipole motors

At the heart of the S-Force series are highly compact single-phase and three-phase multipole motors with wear-free electronic commutation. Their outstanding features include high efficiency with low dissipated energy, maximum efficiency and intelligent function - and above all, their amount of power. The new motors attain over 300 watts of peak power.

The drives are designed for operation on 24 and 48-volt direct current (in some cases, also 12-volts) and feature reverse polarity and overload protection. Optionally, the motors can be equipped with a wide variety of control and monitoring functions, including speed monitoring, alarm signal, open loop speed control via PWM, control voltage or integrated or external temperature sensor.

Maximum aerodynamic efficiency

The wide range of aerodynamic details boasted by each fan is a highlight of their pioneering engineering. Special impellers, developed just for the S-Force series, have a revolutionary impeller design that provides unmatched pressure build-up in the saddle. The especially steep curves of this generation of fans have values that push the limits of the possible.
The optimized inside contours of the housing, the small gap clearance between the blade and venturi housing, and the use of winglets on the fan blades also ensure exemplary running smoothness. The aerodynamic optimum design, coupled with maximum mechanical precision, enables the S-Force fans to have constant low noise.

The following pages provide a detailed overview of the technical data and application areas of all products.

max. 222 m³/h

Series 8200JH

80 x 80 x 38 mm

- Highly stable characteristic curve for high air flow with back pressure.
- Innovative impeller with winglets for low noise.
- Optional Vario-Pro: Highly adaptable software configuration of the fan enables a tailor-made solution to the specific requirements of your applications.
- Material: fiberglass-reinforced plastic. Impeller PA, housing PBT.
- Fully intergrated electronic commutation. Protected against reverse polarity and blocking.
- Electrical connection via single leads AWG 22, TR 64. Stripped and tinned ends.
- Blowing over struts. Rotational direction CCW looking at rotor.
- Mass: 200 g.

Nominal Data	Air Flow	Air Flow	Nominal Voltage	Voltage Range	Noise	Sound Power	Ball Bearings	Power Input	Nominal Speed	Temperature Range	Service Life L_{10} (40 °C) ebm-papst Standard / Service Life L_{10} (T_{max}) ebm-papst Standard	Life expectancy $L_{10}\Delta$ (40 °C)	Curve	Speed signal
Type	**m³/h**	**CFM**	**V DC**	**V DC**	**dB(A)**	**Bel**	**■**	**Watt**	**min⁻¹**	**°C**	**Hours**	**Hours**		
8212 JH3	190	111.8	**12**	6...13.8	66	7.3	■	25	12 000	-20...+70	55 000 / 27 500	110 000	1	/2
8212 JH4	222	130.7	**12**	6...13.8	71	7.8	■	39	14 000	-20...+70	50 000 / 25 000	100 000	2	/2
8214 JH3	190	111.8	**24**	12...27.6	66	7.3	■	25	12 000	-20...+70	55 000 / 27 500	110 000	1	/2
8214 JH4	222	130.7	**24**	12...27.6	71	7.8	■	37	14 000	-20...+70	50 000 / 25 000	100 000	2	/2
8218 JH3	190	111.8	**48**	20...58	66	7.3	■	25	12 000	-20...+70	55 000 / 27 500	110 000	1	/2
8218 JH4	222	130.7	**48**	20...58	71	7.8	■	37	14 000	-20...+70	50 000 / 25 000	100 000	2	/2

8200 JH3 and JH4 also as standard with PWM control input and speed signal.
Speed control range from 2000 min⁻¹ up to maximum nominal speed. Stationary at 0 % PWM, maximum speed when no sensor is connected.

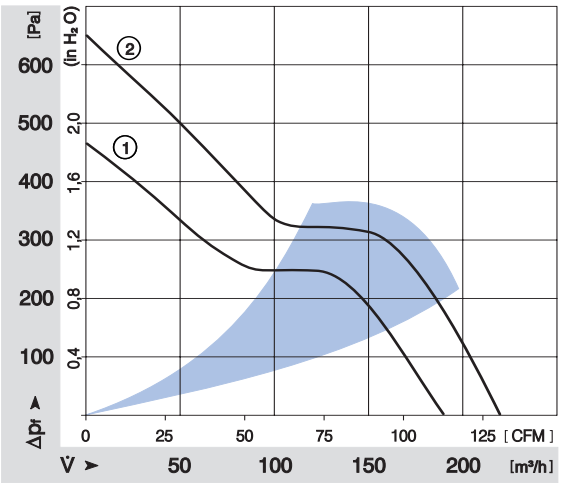

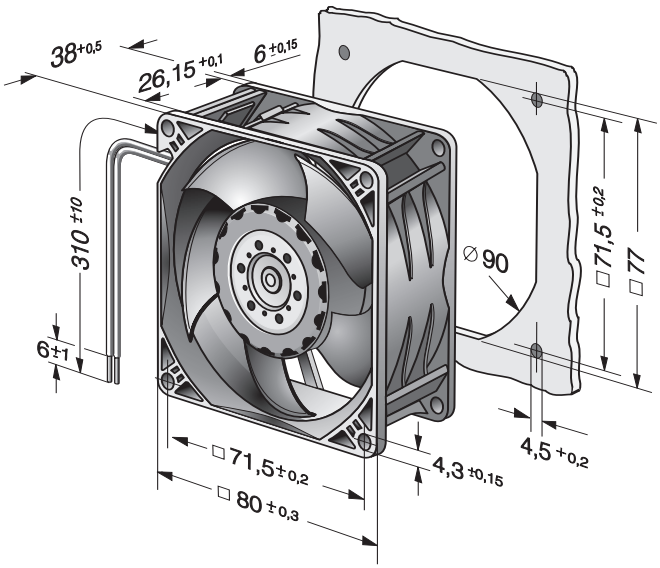

max. 280 m³/h

Series 3200 JH

92 x 92 x 38 mm

- Highly stable characteristic curve for high air flow with back pressure.
- Innovative impeller with winglets for low noise.
- Optional Vario-Pro: Highly adaptable software configuration of the fan enables a tailor-made solution to the specific requirements of your applications.
- Material: fiberglass-reinforced plastic. Impeller PA, housing PBT.
- Fully intergrated electronic commutation. Protected against reverse polarity and blocking.
- Electrical connection via single leads AWG 22, TR 64. Stripped and tinned ends.
- Blowing over struts. Rotational direction CCW looking at rotor.
- Mass: 280 g.

Nominal Data	Air Flow	Air Flow	Nominal Voltage	Voltage Range	Noise	Sound Power	Ball Bearings	Power Input	Nominal Speed	Temperature Range	Service Life L_{10} (40 °C) ebm-papst Standard	Service Life L_{10} (T_{max}) ebm-papst Standard	Life expectancy $L_{10}\Delta$ (40 °C)	Curve	Speed signal
Type	**m³/h**	**CFM**	**V DC**	**V DC**	**dB(A)**	**Bel**	**■**	**Watt**	**min⁻¹**	**°C**	**Hours**		**Hours**		
3212 JH3	237	139.5	**12**	6...13.8	69	7.8	■	30.0	11 000	-20 ...+70	65 000 / 32 500		130 000	1	/2
3212 JH4	280	164.8	**12**	6...13.8	73	8.2	■	50.0	13 000	-20 ...+70	60 000 / 30 000		120 000	2	/2
3214 JH3	237	139.5	**24**	12...27.6	69	7.8	■	30.0	11 000	-20 ...+70	65 000 / 32 500		130 000	1	/2
3214 JH4	280	164.8	**24**	12...27.6	73	8.2	■	50.0	13 000	-20 ...+70	60 000 / 30 000		120 000	2	/2
3218 JH3	237	139.5	**48**	20...58.0	69	7.8	■	30.0	11 000	-20 ...+70	65 000 / 32 500		130 000	1	/2
3218 JH4	280	164.8	**48**	20...58.0	73	8.2	■	50.0	13 000	-20 ...+70	60 000 / 30 000		120 000	2	/2

3200 JH3 and JH4 also as standard with PWM control input and speed signal.
Speed control range from 2000 min⁻¹ up to maximum nominal speed. Stationary at 0 % PWM, maximum speed when no sensor is connected.

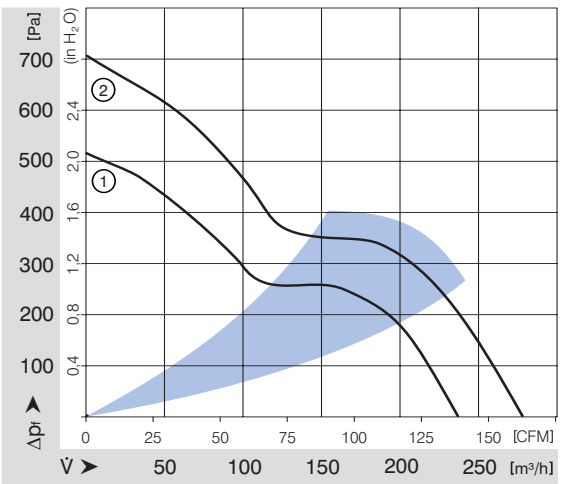

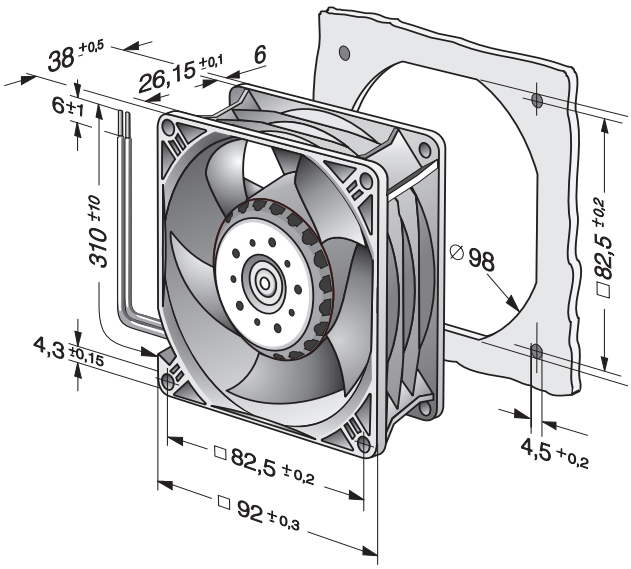

ebmpapst

max. 570 m³/h

Series 4100 N

119 x 119 x 38 mm

- Highly stable characteristic curve for high air flow with high back pressure.
- Available as standard with PWM control input and speed signal, additional inputs and outputs on request. 3-phase fan drive with high degree of running smoothness.
- Material: aluminium housing, fiberglass-reinforced PA impeller; housing with grounding lug for screw M4 x 8 (Torx).
- Protected against reverse polarity and blocking.
- Electrical connection via single leads AWG 20, sensor and control leads AWG 22, UL1007, TR 64. Stripped and tinned ends.
- Air intake over struts. Rotional direction CW looking at rotor.
- Mass: 425 g.

Nominal Data	Air Flow	Air Flow	Nominal Voltage	Voltage Range	Noise	Sound Power	Ball Bearings	Power Input	Nominal Speed	Temperature Range	Service Life L_{10} (40 °C) ebm-papst Standard	Service Life L_{10} (T_{max}) ebm-papst Standard	Life expectancy $L_{10}\Delta$ (40 °C)	Curve	Speed signal
Type	**m³/h**	**CFM**	**V DC**	**V DC**	**dB(A)**	**Bel**	**■**	**Watt**	**min⁻¹**	**°C**	**Hours**		**Hours**		
4114 N/2H7P	500	294.2	**24**	16...30	76	8.5	■	90	9 500	-20...+75	57 500 / 25 000		115 000	1	/2
4114 N/2H8P	570	335.5	**24**	16...30	78	8.9	■	120	11 000	-20...+75	55 000 / 22 500		110 000	2	/2
4118 N/2H7P	500	294.2	**48**	36...60*	76	8.5	■	90	9 500	-20...+75	57 500 / 25 000		115 000	1	/2
4118 N/2H8P	570	335.5	**48**	36...60*	78	8.9	■	120	11 000	-20...+75	55 000 / 22 500		110 000	2	/2

To achieve the specified life, it is advisable to wire up an external capacitor with 470 µF between the positive and negative strands.

*36...72 V DC on request.

Speed control range from 500 min⁻¹ up to maximum nominal speed. Stationary at 0 % PWM, maximum speed when no sensor is connected.

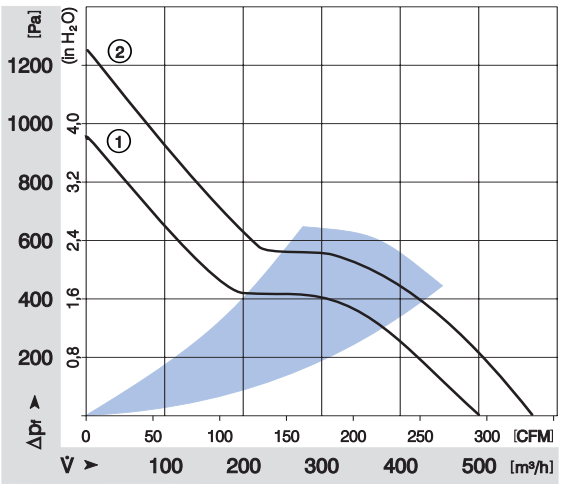

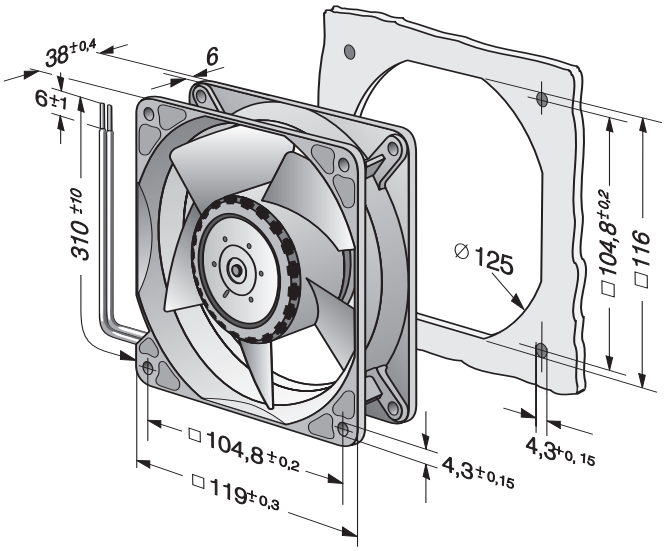

max. 670 m³/h

Series 5300

140 x 140 x 51 mm

- 3-phase fan drive high degree of running smoothness.
- Highly stable characteristic curve for high air flow with high back pressure.
- Low operating noise at high back pressure.
- Standard with PWM control input and speed signal, additional inputs and outputs on request.
- Material: aluminium housing, fiberglass-reinforced PA impeller; housing with grounding lug for screw M4 x 8 (Torx).
- Protected against reverse polarity and blocking.
- Air intake over struts. Rotional direction CW looking at rotor.
- Mass: 900 g.

Nominal Data	Air Flow	Air Flow	Nominal Voltage	Voltage Range	Noise	Sound Power	Ball Bearings	Power Input	Nominal Speed	Temperature Range	Service Life L_{10} (40 °C) ebm-papst Standard	Service Life L_{10} (T_{max}) ebm-papst Standard	Life expectancy $L_{10}\Delta$ (40 °C)	Curve	Speed signal
Type	**m³/h**	**CFM**	**V DC**	**V DC**	**dB(A)**	**Bel**	**■**	**Watt**	**min⁻¹**	**°C**	**Hours**		**Hours**		
5312 /2 TDHP	410	241.3	**12**	8...16	70	7.7	■	41	6 000	-20...+70	70 000 / 35 000		140 000	1	/2
5314 /2 TDHP	410	241.3	**24**	16...36	70	7.7	■	41	6 000	-20...+70	70 000 / 35 000		140 000	1	/2
5314 /2 TDHHP	490	288.4	**24**	16...36	75	8.1	■	67	7 000	-20...+70	62 500 / 30 000		120 000	2	/2
5318 /2 TDHP	410	241.3	**48**	36...72	70	7.7	■	41	6 000	-20...+70	70 000 / 35 000		140 000	1	/2
5318 /2 TDHHP	490	288.4	**48**	36...72	75	8.1	■	67	7 000	-20...+70	62 500 / 30 000		120 000	2	/2
5318 /2 TDH4P	670	394.3	**48**	36...72	79	8.8	■	144	9 200	-20...+65	57 500 / 32 500		115 000	3	/2

Speed control range from 1000 min⁻¹ up to maximum nominal speed. Stationary at 0 % PWM, maximum speed when no sensor is connected.

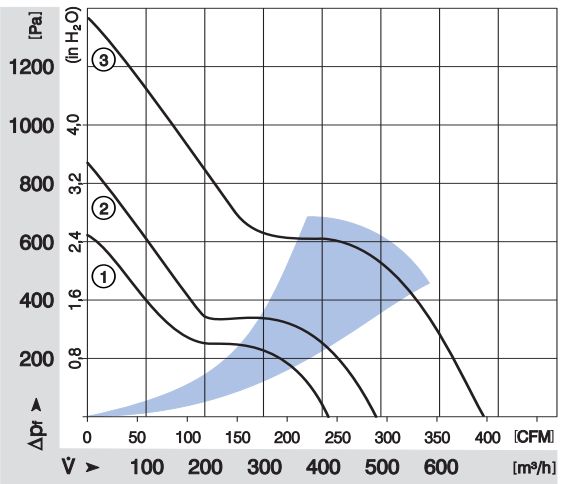

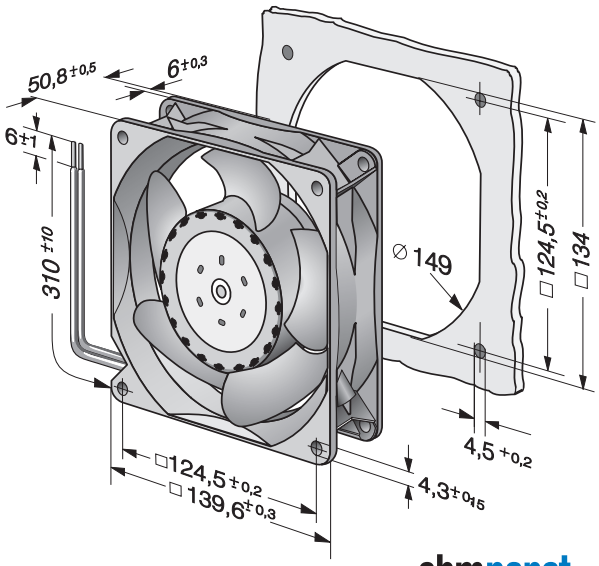

ebmpapst

max. 950 m³/h

Series 6300

172 Ø x 51 mm

- 3-phase fan drive high degree of running smoothness.
- Highly stable characteristic curve for high air flow with high back pressure.
- Low operating noise at high back pressure.
- Standard with PWM control input and speed signal, additional inputs and outputs on request.
- Material: aluminium housing, fiberglass-reinforced PA impeller; housing with grounding lug for screw M4 x 8 (Torx).
- Protected against reverse polarity and blocking.
- Blowing over struts. Rotational direction CCW looking at rotor.
- Mass: 910 g.

Nominal Data	Air Flow	Air Flow	Nominal Voltage	Voltage Range	Noise	Sound Power	Ball Bearings	Power Input	Nominal Speed	Temperature Range	Service Life L_{10} (40 °C) ebm-papst Standard	Service Life L_{10} (T_{max}) ebm-papst Standard	Life expectancy $L_{10}\Delta$ (40 °C)	Curve	Speed sensor
Type	**m³/h**	**CFM**	**V DC**	**V DC**	**dB(A)**	**Bel**	**■**	**Watt**	**min⁻¹**	**°C**	**Hours**		**Hours**		
6312 /2TDHP	600	353.1	**12**	8...16	64	7.6	■	41	6 000	-20...+70	70 000 / 35 000		140 000	1	/2
6314 /2TDHP	600	353.1	**24**	16...36	64	7.6	■	41	6 000	-20...+70	70 000 / 35 000		140 000	1	/2
6314 /2TDHHP	710	417.9	**24**	16...36	69	7.9	■	67	7 000	-20...+70	62 500 / 30 000		120 000	2	/2
6318 /2TDHP	600	353.1	**48**	36...72	64	7.6	■	41	6 000	-20...+70	70 000 / 35 000		140 000	1	/2
6318 /2TDHHP	710	417.9	**48**	36...72	69	7.9	■	67	7 000	-20...+70	62 500 / 30 000		120 000	2	/2
6318 /2TDH4P	950	559.1	**48**	36...72	75	8.4	■	150	9 200	-20...+65	52 500 / 30 000		107 500	3	/2

Speed control range from 1000 min⁻¹ up to maximum nominal speed. Stationary at 0 % PWM, maximum speed when no sensor is connected.

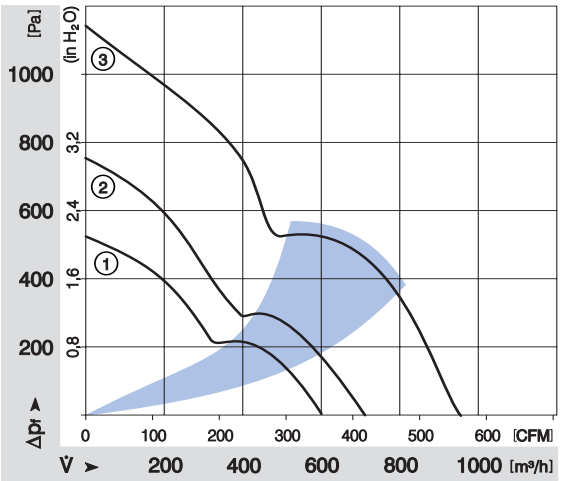

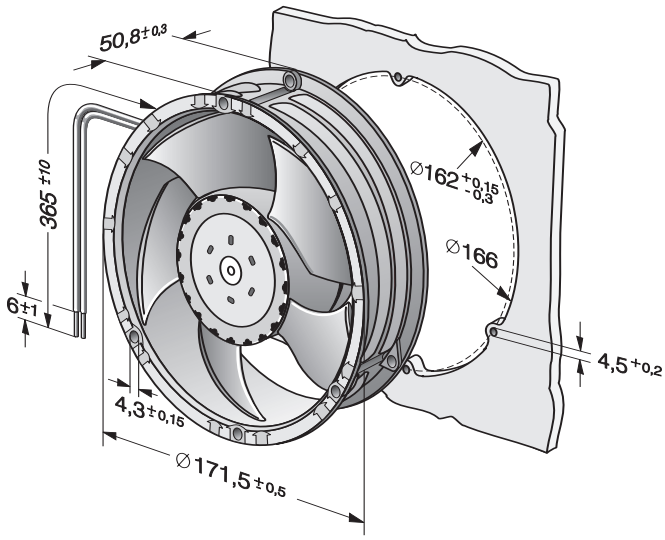

L1099GB 1.0408

Subject to technical alterations
Printed in Germany

Development, production and delivery from a single source

At ebm-papst, the development and production of motors, fans and electronics is all managed at a single source. This guarantees that all components are perfectly matched to one another and produce optimum performance. It is of course only logical that just-in-time delivery and logistics are also managed from a single source. Whether it be in Germany or at any of our international locations: We offer you first-class service and logistics, from local technical support through to inventory management.

ebm-papst
St. Georgen GmbH & Co. KG

Hermann-Papst-Straße 1
D-78112 ST. GEORGEN
Germany
Phone +49 (0) 7724 / 81-0
Fax +49 (0) 7724 / 81-1309
info2@de.ebmpapst.com

www.ebmpapst.com

ebmpapst